PHILIPS

data systems

# PHILIPS

Line PRINTER

Philips-Electrologica
Nederland N.V.

PHILIPS

data systems

# MODULE C O 3 :

## LINE PRINTER P 150

Copyright: N.V. Philips Electrologica
Product Division Office Computers

Code: 8610 35 0313 11
Dec. 1972

INDEX


| | | Page | Date |
|---|---|---|---|
| 1. | GENERAL INFORMATION | C03.10.1 | Dec. 1972 |
| | | C03.10.2 | Jan. 1972 |
| 2. | PILOT LAMPS AND OPERATIONAL ELEMENTS | C03.20.1 | Jan. 1972 |
| 3. | PROGRAMMING TECHNIQUE | C03.30.1 | Jan. 1972 |
| | | C03.30.2 | Jan. 1972 |
| 4. | INSTRUCTIONS | | |
| 4.1 | **Instruction LDN** | C03.41.1 | Jan. 1972 |
| | | C03.41.2 | Jan. 1972 |
| | | C03.41.3 | Jan. 1972 |
| | | C03.41.4 | Jan. 1972 |
| | | C03.41.5 | Dec. 1972 |
| | | C03.41.6 | Dec. 1972 |
| | Conversion Table Print Positions | C03.41.7 | Jan. 1972 |
| 4.2 | **Instruction CTR** | C03.42.1 | Jan. 1972 |
| | | C03.42.2 | Jan. 1972 |
| | | C03.42.3 | Dec. 1972 |
| | | C03.42.4 | Dec. 1972 |
| | | C03.42.5 | Dec. 1972 |
| 4.3 | **Instruction PRL** | C03.43.1 | Jan. 1972 |
| | | C03.43.2 | Dec. 1972 |
| | | C03.43.3 | Dec. 1972 |
| 4.4 | **Instruction BRC** | C03.44.1 | Jan. 1972 |
| | | C03.44.2 | Dec. 1972 |
| 4.5 | **Programming Problem** | C03.45.1 | Jan. 1972 |
| | Flowchart | C03.45.2 | Jan. 1972 |
| | Absolute programming | C03.45.3 | Jan. 1972 |
| | | C03.45.4 | Jan. 1972 |
| | Assembler programming | C03.45.5 | Jan. 1972 |
| | | C03.45.6 | Jan. 1972 |
| | | C03.45.7 | Jan. 1972 |
| 5. | SPECIFICATIONS | | |
| 5.1 | **Character set** | C03.51.1 | Jan. 1972 |
| 5.2 | **Fan-fold paper requirements** | C03.52.1 | Jan. 1972 |
| 5.3 | **Microprograms** | C03.53.1 | Dec. 1972 |
| 6. | OPERATING INSTRUCTIONS | | |
| 6.1 | **Replacing the ink ribbon** | C03.61.1 | Jan. 1972 |
| | | C03.61.2 | Jan. 1972 |
| 6.2 | **Insertion and positioning of forms** | C03.62.1 | Jan. 1972 |


confidential information

PHILIPS

## 1. GENERAL INFORMATION

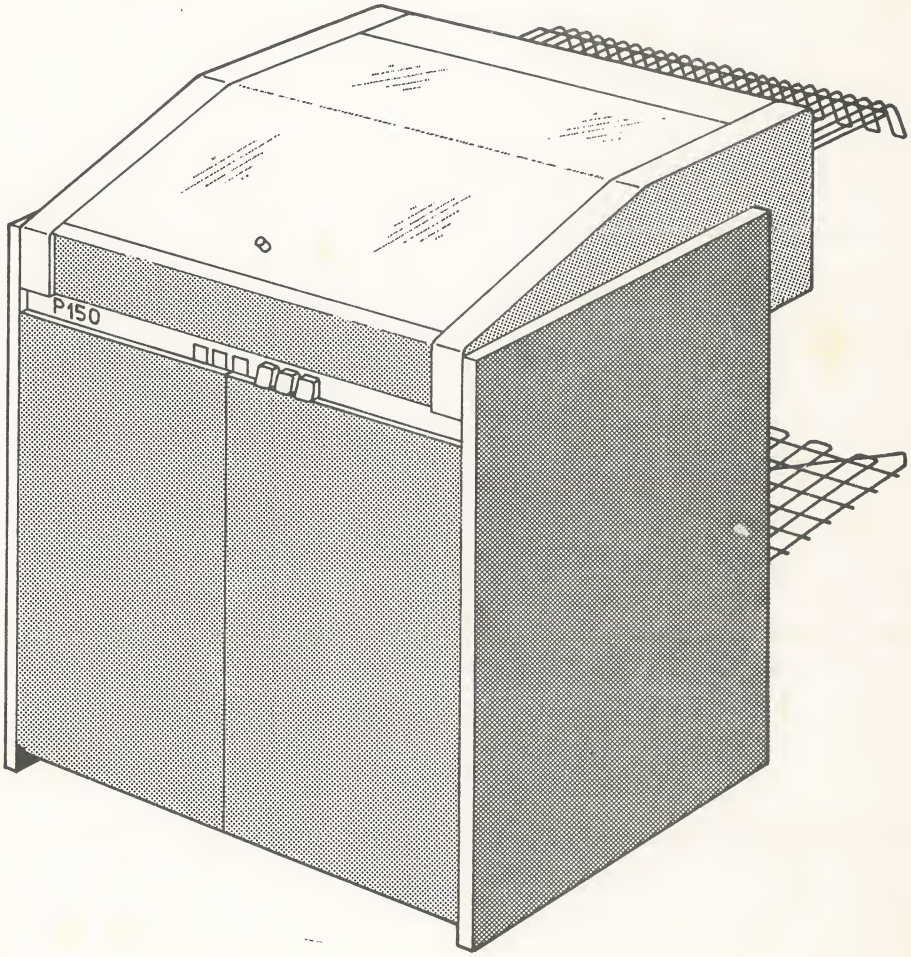


The P 150 is a mosaic printer, equipped with 2 rigidly coupled print heads, which simultaneously print half a line of maximum 64 characters each. The character display consists of a matrix comprising 11 dots vertically and 9 dots horizontally.

**Technical data**

| | | |
|---|---|---|
| Number of characters/line | : | up to 128, alphanumeric |
| Character set | : | 64 characters |
| Printing speed | : | about 50 lines/min. for a full line |
| Speed of the print heads | : | in printing direction : 21.5 cm/sec<br>in opposite direction : 65 cm/sec |
| Horizontal spacing | : | 2.6 mm |
| Vertical spacing | : | 1/6 inch (4.233 mm) |
| Speed of line feed | : | min. 30 lines feed/sec |

confidential information

PHILIPS

| | | |
|---|---|---|
| Ink ribbon | : | material : nylon<br>colour : black<br>width : 12.7 mm<br>length : 36.5 m<br>The printer is equipped with an automatic ink ribbon device. |
| Form feed system | : | 1 continuous stationary, width adjustable between 70 and 450 mm, which can handle fan-fold pinfeed forms. |
| Form feed | : | - program-controlled<br>- manually: push-buttons for:<br>1. 1 line feed at a time<br>2. continuous line feed. |
| Form synchronization | : | program-controlled. |
| Supply voltage | : | 110, 115, 127, 220 or 245 V~ $^{+10\%}_{-15\%}$<br>50 or 60 c/s ± 2%. |
| Power consumption | : | about 500 VA |
| Ambient temperature | : | + 5°C to + 35°C |
| Relative humidity | : | max. 90% |
| Dimensions | : | width : 625 mm<br>height : 880 mm<br>depth : 480 mm (900 mm when paper guide grid is mounted) |
| Weight | : | about 60 kg |

confidential information

PHILIPS

## 2. PILOT LAMPS AND OPERATIONAL ELEMENTS

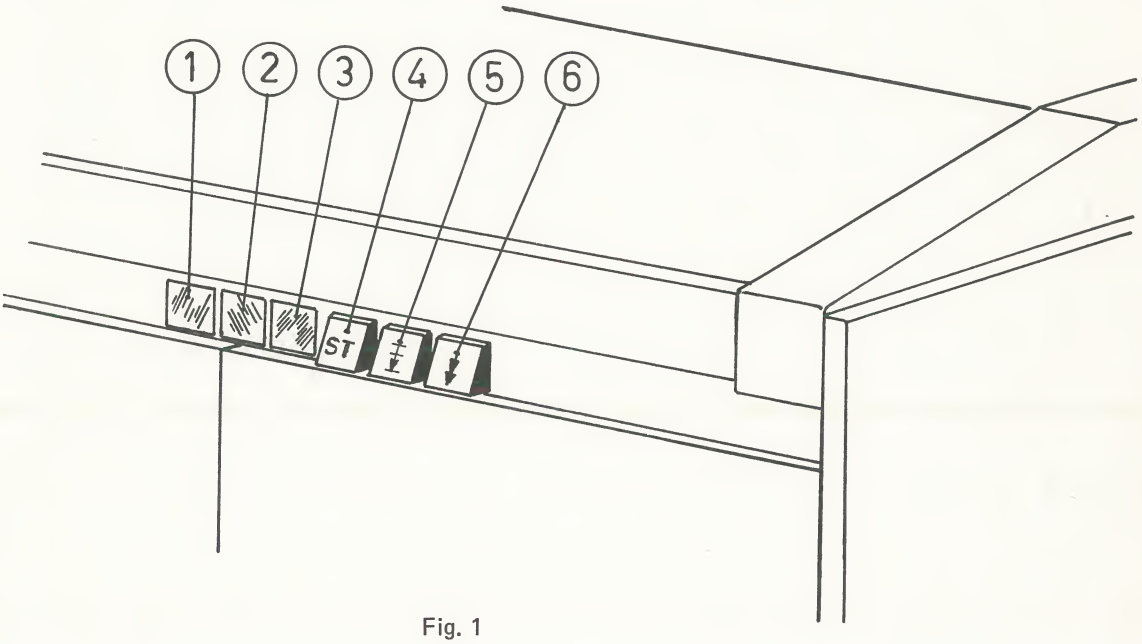


Fig. 1

1. Pilot lamp "POWER ON" (green). This lamp lights up after the P 350 Central Processor, feeding the power supply unit of the line printer, has been switched on.

2. Pilot lamp "ERROR" (red). This lamp lights up at incorrect paper transport.

3. Pilot lamp "NO PAPER/COVER NOT CLOSED" (yellow). This lamp lights up at end of paper, or when the cover is not closed.

4. Push-button "RELEASE", marked "ST". This push-button is to be depressed after a malfunction as indicated by the pilot lamps "ERROR" or "NO PAPER/ COVER NOT CLOSED" has occurred.

5. Push-button "LINE ADVANCE", marked ⤓ , for a single line feed.

6. Push-button "PAPER FEED", marked ↓ , for continuous feed as long as the button is depressed.

The "LINE ADVANCE" and "PAPER FEED" push-buttons are only active when the cover is open. At open cover, the printer is locked so that it cannot be damaged during the paper feed.

confidential information

PHILIPS

## 3. PROGRAMMING TECHNIQUE

The line printer is equipped with two rigidly coupled print heads. For each print head one interface channel is required. Both print heads print the same number of characters with a maximum of 64 each. The power supply unit of the line printer remains switched on as long as the Central Processor is switched on. The driving motor of the line printer is automatically switched on when a printing instruction is met in the program and switched off after this printing instruction has been executed.
Before the instruction "PRINT A LINE" (PRL) can be given, the data to be printed must have been made available in a buffer from which they are printed. As the maximum line width is 128 characters and each character requires 2 positions in a buffer location (alphabetic representation) the maximum capacity of the buffer is 2 x 128 = 256 positions, or

$$\frac{256}{16} = 16 \text{ locations.}$$

For ease of reference the buffer is supposed to be divided into maximum 128 groups of 2 positions, referred to as positions 01 - 128, which correspond to characters 01 - 128 in the printed line.

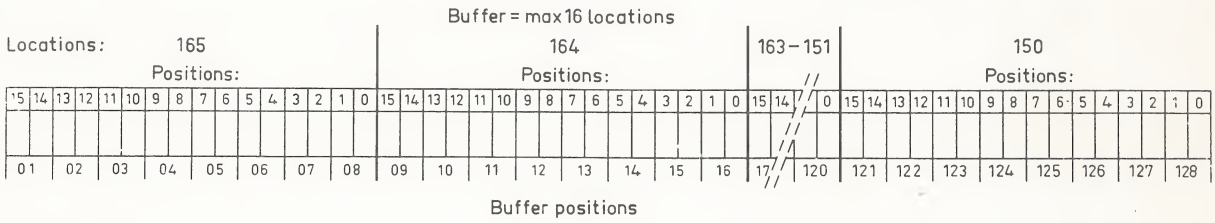


Fig. 2

The buffer locations can be situated in a successive range of Data Addresses, anywhere in the internal store, except of course, the hardware locations, or the locations required for the extension of the microprogram.
The actual buffer locations have to be stated by the programmer in the relevant instructions.

The way of loading the print buffer depends on the representation of the source data:

- Numeric data: the buffer is loaded from the *lowest* even position in the *(lowest)* buffer word destined to store the relevant numeric data upwards.

- Alphabetic data: the buffer is loaded from the *highest* even position in the *(highest)* buffer word destined to store the relevant alphabetic data downwards.

confidential information

PHILIPS

The buffer is printed from position 01 up to the last position of the first half of the programmed total buffer capacity, and simultaneously from the first position of the second half upwards.
If fewer than 128 characters are loaded, for instance 80 characters (= 10 DA's), there are two possibilities:

a. both print heads print 5 DA's simultaneously

Fig. 3

b. the first print head prints 8 DA's and the second print head prints the remaining 2 DA's

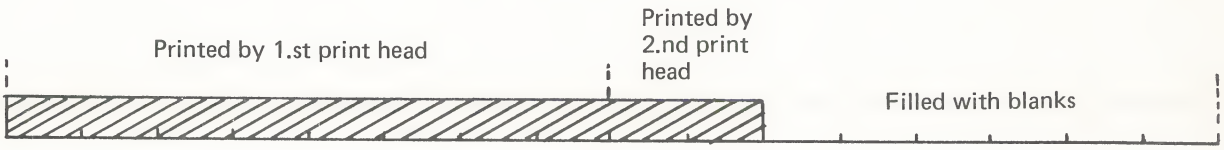


Fig. 4

In the case of a., the printing speed is increased but a disadvantage is, that because of the fixed distance of the print heads, the two parts of the line do not link-up.
In the case of b., the two parts do link-up but the printing speed is not increased.
In the case of a. the buffer can be limited to 10 words, in the case of b. a buffer length of 16 words is required. The positions in the buffer where no characters are wanted have to be filled with blanks.

As in the buffer all data to be printed must be available in the alphabetic machine code, the numeric data resulting from the processing operations has to be converted first into the alphabetic representation. This conversion has to be effected via the instruction LDN (LoaD Numeric).
Via the CTR instruction (Compare and TRansfer) the alphabetic data with for instance the IR- or ETB-code is transferred to any desired position in the print buffer. The alphabetic text to be transferred may consist of several words.
Positions in the print buffer where nothing is transferred to are not cleared.
Via the BRC instruction, addresses can be stated to which the program will jump if "End Of Paper" or "Paper Feed Error" is detected.
The print heads return to their home position when the machine is switched on.

confidential information

PHILIPS

## 4. INSTRUCTIONS

### 4. 1. Instruction LDN (LoaD Numeric)

*Assembler instruction*

| MNEMONIC | 13 | 12 | 11 | 10 | 9 | | | | | 8 | 7 | 6 | | 5 | 4 | 3 | | 2 | 1 | 0 |
|---|---|---|---|---|---|---|---|---|---|---|---|---|---|---|---|---|---|---|---|---|
| | $X_1$ | $X_0$ | $Y_2$ | $Y_1$ | $Y_0$ | $Z_2$ | $Z_1$ | $Z_0$ | A-LABEL | I | N | C | B-LABEL | I | N | C | C-LABEL | I | N | C |
| LPN | | Smb in non sign. pos. | | Smb at the end | Fig. aft. d.p. | | | | | Tot.no of fig. | | Low. even pos. buf. DA | Label of DA | | | | Label of Lowest buffer word | | | |
| LPNP | | | | | | | | | | | | | | | | | | | | |
| LPØ | | | | | | | | | | | | | | | | | | | | |
| LPØP | | | | | | | | | | | | | | | | | | | | |
| LPNM | | | Label of Mask | | | | | | | | | | | | | | | | | |
| LPØM | | | | | | | | | | | | | | | | | | | | |

Fig. 5

This instruction can be used to convert a numeric data word into alphanumeric representation and to transfer it to any desired positions in the print buffer.
It is possible to load without punctuation, with standard punctuation or with programmed punctuation by means of a mask, and to combine these punctuations with overlining.
It is equally possible to have the loaded data followed by a symbol (e.g. +, —, %) and to have non-significant leading zeroes replaced by symbols (e.g. *,/) or spaces. Only 1 DA can be loaded at a time in the buffer.
Loading is started from the *lowest* position in the *(lowest)* buffer word destined to store the relevant numeric data upwards.

*Absolute instruction:*

| MNE-MONIC | OP. CD. | X 1 | X 0 | Y 2 | Y 1 | Y 0 | A 2 | A 1 | A 0 | B 2 | B 1 | B 0 | C 2 | C 1 | C 0 |
|---|---|---|---|---|---|---|---|---|---|---|---|---|---|---|---|
| LDN | 62 | 0 = no punctuation<br>1 = standard punctuation | Symbols instead of non-significant zeroes<br>1 = space<br>2 = +<br>3 = ◊<br>4 = *<br>5 = %<br>6 = ‰<br>7 = ·<br>8 = ,<br>9 = /<br>10 = -<br>11 = )<br>12 = "<br>13 = $<br>14 = (<br>15 = space | 0 | Symbols at the end<br>0 = no symb<br>1 = space/-<br>2 = +/-<br>3 = ◊/$̲$<br>4 = */*̲<br>5 = %<br>6 = ‰<br>7 = ·<br>8 = ,<br>9 = /<br>10 = -<br>11 = )<br>12 = "<br>13 = $<br>14 = (<br>15 = space | No. of fig. aft. d. p. | Capacity (total no. of figures) 0-15 | | Lowest even pos in the buffer DA (C-section) | DA of num. data | | | Lowest buffer DA | | |
| | | 2 = software punctuation | 0 = zeroes | Mask address | | | | | | | | | | | |
| | | + 4 = over-lining | | | | | | | | | | | | | |

Fig. 6



confidential information

PHILIPS

X-section

$x_1$: 0 = no puntuation

1 = standard punctuation

2 = programmed punctuation by means of a mask

Adding 4 to the $x_1$-section causes overlining of the transferred word in a subsequent print instruction.

The mnemonics of the Assembler instructions have following meaning:

LPN = Load Print line Numeric without punctuation
LPØ = Load Print line numeric without punctuation and with Øverlining
LPNP = Load Print line Numeric with standard Punctuation
LPØP = Load Print line numeric with Øverlining and standard Punctuation
LPNM = Load Print line Numeric with punctuation from Mask
LPØM = Load Print line numeric with Øverlining and punctuation from Mask.

$x_0$: if instead of non-significant leading zeroes, special symbols are wanted, these symbols have to be programmed in the following code

0 = zeroes
1 = spaces
2 = +
3 = ◊
4 = *
5 = %
6 = ‰
7 = .
8 = ,
9 = /
$\overline{10}$ = -
$\overline{11}$ = )
$\overline{12}$ = "
$\overline{13}$ = $
$\overline{14}$ = (
$\overline{15}$ = spaces

Note: The modifier in column $x_0$ is also active with punctuation from mask ($x_1$ = 2).
This concerns the Assembler instructions LPNM and LPØM.

confidential information

PHILIPS

**Y-section**

1. **If $x_1$ = 0 or 1** (Assembler instructions LPN, LPØ, LPNP, LPØP)

$y_2$ = not used; to be filled out with 0

$y_1$ = if the printed data are to be followed by a symbol, this symbol has to be programmed here in the following code:

| | | | |
|---|---|---|---|
| 0 | = | no symbol | |
| 1 | = | space/– | 1) |
| 2 | = | +/– | 1) |
| 3 | = | ◊/◊ | 1) |
| 4 | = | */* | 1) |
| 5 | = | % | |
| 6 | = | $\%_0$ | |
| 7 | = | . | |
| 8 | = | , | |
| 9 | = | / | |
| $\overline{10}$ | = | – | |
| $\overline{11}$ | = | ) | |
| $\overline{12}$ | = | " | |
| $\overline{13}$ | = | $ | |
| $\overline{14}$ | = | ( | |
| $\overline{15}$ | = | space | |

1) dependent on algebraic sign in position 0 of the relevant data word.

$y_0$ : 0 - $\overline{13}$ being the desired number of figures after decimal point.

2. **If $x_1$ = 2** (Assembler instructions LPNM, LPØM)

With punctuation from mask, the address (label) of the mask location has to be stated in the y-section.



confidential information

PHILIPS

**A-section**

$A_2$ $A_1$ : 00 ..... 15, being the number of figures to be loaded, excluding the algebraic sign.

$A_0$ : 0-2-4-6-8-10-12-14, being the lowest position in the *(lowest)* buffer word destined to store the relevant numeric data.
In the determination of the buffer capacity needed to store the relevant numeric data, all punctuation symbols, as well as a possible algebraic sign must be taken into account.
For the conversion from print position to buffer location, see table at the end of this chapter.

**B-section**

Address (label) of DA, the contents of which are to be transferred.

**C-section**

Address (label) of *(lowest)* buffer word destined to store the relevant numeric data.

**Possible punctuation**

1. *No punctuation*

   With "No punctuation" the contents of the relevant DA are loaded without punctuation symbols, on the understanding that a decimal mark and maximum 13 figures after decimal mark can nevertheless be obtained.

2. *Standard punctuation*

   This punctuation consists of:

   - a decimal mark (comma) and maximum 13 figures after the decimal mark, if a fractional number is to be loaded;

   - a point before the 3rd, 6th, 9th and 12th *figure preceding the decimal mark,* reckoned from the decimal mark. This point is suppressed if preceding the 3rd, 6th, 9th or 12th figure no more figures (or symbols) are to be loaded.

   The points are replaced by the special symbol programmed in $x_0$ if at the left of the points *only these special symbols* are to be loaded instead of non-significant zeroes. This does not, however, apply if in column $x_0$ spaces are programmed as in that case the points are suppressed.

   *Note:* On request, the functions of comma and point in the standard punctuation can be reversed (Anglo-American punctuation system).

   E.g. 19,385.56 (Anglo-American punctuation)
   19.385,56 (European punctuation)

confidential information

PHILIPS

**Examples**

1. Positions 1 - 8 of numeric DA 143 (label: NUMBER) have to be transferred to positions 20 - 27 of a print buffer. No punctuation, no additional symbol, and spaces instead of non-significant leading zeroes.
   Buffer locations: 960 - 969 (label 969: P-BUFF)
   Instruction code:

| | VARIANT | | | | | | | | A-ADDRESS | | | | | | | | | B-ADDRESS | | | | | | | | | C-ADDRESS | | | | | | | | |
|---|---|---|---|---|---|---|---|---|---|---|---|---|---|---|---|---|---|---|---|---|---|---|---|---|---|---|---|---|---|---|---|---|---|---|---|
| OP. CODE | $X_1$ | $X_0$ | $Y_2$ | $Y_1$ | $Y_0$ | $Z_2$ | $Z_1$ | $Z_0$ | LABEL | | | | | | + OR– INC. | | | LABEL | | | | | | + OR– INC. | | | LABEL | | | | | | + OR– INC. | | |
| 12 13 14 15 | 16 | 17 | 18 | 19 | 20 | 21 | 22 | 23 | 24 | 25 | 26 | 27 | 28 | 29 | 30 | 31 | 32 | 33 | 34 | 35 | 36 | 37 | 38 | 39 | 40 | 41 | 42 | 43 | 44 | 45 | 46 | 47 | 48 | 49 | 50 |
| L P N | | 1 | | | | | | | | | | | | | 0 | 8 | K | N | U | M | B | E | R | | | | P | - | B | U | F | F | | | 3 |

2. Positions 0 - 10 of numeric DA 165 (label: NUMBER) have to be transferred to buffer positions 50 - 63 with standard punctuation, overlining and "+/-" in the sign position. Two figures after decimal point and spaces instead of non-significant leading zeroes.
   Buffer locations: 350 - 359 (label 359: P-BUFF)

   Instruction code:

| | VARIANT | | | | | | | | A-ADDRESS | | | | | | | | | B-ADDRESS | | | | | | | | | C-ADDRESS | | | | | | | | |
|---|---|---|---|---|---|---|---|---|---|---|---|---|---|---|---|---|---|---|---|---|---|---|---|---|---|---|---|---|---|---|---|---|---|---|---|
| OP CODE | $X_1$ | $X_0$ | $Y_2$ | $Y_1$ | $Y_0$ | $Z_2$ | $Z_1$ | $Z_0$ | LABEL | | | | | | + OR– INC. | | | LABEL | | | | | | + OR– INC. | | | LABEL | | | | | | + OR– INC. | | |
| 12 13 14 15 | 16 | 17 | 18 | 19 | 20 | 21 | 22 | 23 | 24 | 25 | 26 | 27 | 28 | 29 | 30 | 31 | 32 | 33 | 34 | 35 | 36 | 37 | 38 | 39 | 40 | 41 | 42 | 43 | 44 | 45 | 46 | 47 | 48 | 49 | 50 |
| L P Ø P | | 1 | | 2 | 2 | | | | | | | | | | 1 | 0 | 2 | N | U | M | B | E | R | | | | P | - | B | U | F | F | | | 7 |

3. Programmed punctuation

By means of programmed puctuation, the following punctuation symbols can be loaded at any position of the print buffer:

| Symbol | Code |
|---|---|
| No symbol | 0 |
| Space/– 1) | 1 |
| +/– 1) | 2 |
| ◊/◊ 1) | 3 |
| */* 1) | 4 |
| % | 5 |
| ‰ | 6 |
| . | 7 |
| , | 8 |
| / | 9 |
| – | 10 |
| ) | 11 |
| " | 12 |
| $ | 13 |
| ( | 14 |
| No symbol | 15 |

1) If these symbols are programmed instead of position 0 (= sign position) of a numeric data word, it depends on the algebraic sign of the contents of the relevant data word which symbol will be loaded:

Positive contents:
space, +, ◊ or * is loaded
Negative contents:
–, ◊ or * is loaded.

In all other cases the first mentioned symbol will be loaded.

confidential information

PHILIPS

## CONVERSION-TABLE PRINT POSITION TO BUFFER LOCATION

H = Highest DA of buffer

| PRINT POSITION | | | BUFFER LOCATION DA & POSITION | | |
|---|---|---|---|---|---|
| 1 | H | pos. 14 | 44 | H-5 | pos. 08 | 87 | H-10 | pos. 02 |
| 2 | H | pos. 12 | 45 | H-5 | pos. 06 | 88 | H-10 | pos. 00 |
| 3 | H | pos. 10 | 46 | H-5 | pos. 04 | 89 | H-11 | pos. 14 |
| 4 | H | pos. 08 | 47 | H-5 | pos. 02 | 90 | H-11 | pos. 12 |
| 5 | H | pos. 06 | 48 | H-5 | pos. 00 | 91 | H-11 | pos. 10 |
| 6 | H | pos. 04 | 49 | H-6 | pos. 14 | 92 | H-11 | pos. 08 |
| 7 | H | pos. 02 | 50 | H-6 | pos. 12 | 93 | H-11 | pos. 06 |
| 8 | H | pos. 00 | 51 | H-6 | pos. 10 | 94 | H-11 | pos. 04 |
| 9 | H-1 | pos. 14 | 52 | H-6 | pos. 08 | 95 | H-11 | pos. 02 |
| 10 | H-1 | pos. 12 | 53 | H-6 | pos. 06 | 96 | H-11 | pos. 00 |
| 11 | H-1 | pos. 10 | 54 | H-6 | pos. 04 | 97 | H-12 | pos. 14 |
| 12 | H-1 | pos. 08 | 55 | H-6 | pos. 02 | 98 | H-12 | pos. 12 |
| 13 | H-1 | pos. 06 | 56 | H-6 | pos. 00 | 99 | H-12 | pos. 10 |
| 14 | H-1 | pos. 04 | 57 | H-7 | pos. 14 | 100 | H-12 | pos. 08 |
| 15 | H-1 | pos. 02 | 58 | H-7 | pos. 12 | 101 | H-12 | pos. 06 |
| 16 | H-1 | pos. 00 | 59 | H-7 | pos. 10 | 102 | H-12 | pos. 04 |
| 17 | H-2 | pos. 14 | 60 | H-7 | pos. 08 | 103 | H-12 | pos. 02 |
| 18 | H-2 | pos. 12 | 61 | H-7 | pos. 06 | 104 | H-12 | pos. 00 |
| 19 | H-2 | pos. 10 | 62 | H-7 | pos. 04 | 105 | H-13 | pos. 14 |
| 20 | H-2 | pos. 08 | 63 | H-7 | pos. 02 | 106 | H-13 | pos. 12 |
| 21 | H-2 | pos. 06 | 64 | H-7 | pos. 00 | 107 | H-13 | pos. 10 |
| 22 | H-2 | pos. 04 | 65 | H-8 | pos. 14 | 108 | H-13 | pos. 08 |
| 23 | H-2 | pos. 02 | 66 | H-8 | pos. 12 | 109 | H-13 | pos. 06 |
| 24 | H-2 | pos. 00 | 67 | H-8 | pos. 10 | 110 | H-13 | pos. 04 |
| 25 | H-3 | pos. 14 | 68 | H-8 | pos. 08 | 111 | H-13 | pos. 02 |
| 26 | H-3 | pos. 12 | 69 | H-8 | pos. 06 | 112 | H-13 | pos. 00 |
| 27 | H-3 | pos. 10 | 70 | H-8 | pos. 04 | 113 | H-14 | pos. 14 |
| 28 | H-3 | pos. 08 | 71 | H-8 | pos. 02 | 114 | H-14 | pos. 12 |
| 29 | H-3 | pos. 06 | 72 | H-8 | pos. 00 | 115 | H-14 | pos. 10 |
| 30 | H-3 | pos. 04 | 73 | H-9 | pos. 14 | 116 | H-14 | pos. 08 |
| 31 | H-3 | pos. 02 | 74 | H-9 | pos. 12 | 117 | H-14 | pos. 06 |
| 32 | H-3 | pos. 00 | 75 | H-9 | pos. 10 | 118 | H-14 | pos. 04 |
| 33 | H-4 | pos. 14 | 76 | H-9 | pos. 08 | 119 | H-14 | pos. 02 |
| 34 | H-4 | pos. 12 | 77 | H-9 | pos. 06 | 120 | H-14 | pos. 00 |
| 35 | H-4 | pos. 10 | 78 | H-9 | pos. 04 | 121 | H-15 | pos. 14 |
| 36 | H-4 | pos. 08 | 79 | H-9 | pos. 02 | 122 | H-15 | pos. 12 |
| 37 | H-4 | pos. 06 | 80 | H-9 | pos. 00 | 123 | H-15 | pos. 10 |
| 38 | H-4 | pos. 04 | 81 | H-10 | pos. 14 | 124 | H-15 | pos. 08 |
| 39 | H-4 | pos. 02 | 82 | H-10 | pos. 12 | 125 | H-15 | pos. 06 |
| 40 | H-4 | pos. 00 | 83 | H-10 | pos. 10 | 126 | H-15 | pos. 04 |
| 41 | H-5 | pos. 14 | 84 | H-10 | pos. 08 | 127 | H-15 | pos. 02 |
| 42 | H-5 | pos. 12 | 85 | H-10 | pos. 06 | 128 | H-15 | pos. 00 |
| 43 | H-5 | pos. 10 | 86 | H-10 | pos. 04 | | | |

confidential information

PHILIPS

## 4. 2. Instruction CTR (Compare and Transfer)

*Assembler instruction:*

| MNEMONIC | 13 | 12 | 11 | 10 | 9 | | | | | 8 | 7 | 6 | | 5 | 4 | 3 | | 2 | 1 | 0 |
|---|---|---|---|---|---|---|---|---|---|---|---|---|---|---|---|---|---|---|---|---|
| | $X_1$ | $X_0$ | $Y_2$ | $Y_1$ | $Y_0$ | $Z_2$ | $Z_1$ | $Z_0$ | A-LABEL | I | N | C | B-LABEL | I | N | C | C-LABEL | I | N | C |
| LSC<br>LSCT<br>LSØ<br>LSØT | | | | Stop char. 1 | | Stop char. 2 | | | Label of Index Word | | | | | Low. pos. ind. | | High even pos. pr. buf | Label of highest word in print buffer | | | |

Fig. 7

The CTR instruction is used to transfer alphameric data consisting of one or several words to any desired positions in the print buffer.
The transfer takes place:

- from a higher to a lower even position in an alphameric Data Word to be transferred,
- from a higher to a lower word in a number of consecutive words to be transferred,
- from a lower to a higher position (001 - 128) in the print buffer.

Execution of the instruction is terminated:

- after the programmed number of alphameric characters has been transferred,
- if one of max. 2 so-called "stop-characters", which can be programmed in this instruction, is met in the text to be transferred. These stop characters may be for instance IR, ETB or ETX. The stop character concerned may yes or no be tranferred.

As in this instruction more parameters are needed than can be stated in the instruction itself, the remaining parameters are stated in an index, which can be stored in an arbitrary word. This index is referred to in the CTR-instruction.

*Absolute instruction:*

| MNE-MONIC | OP. CD. | X | | Y | | | A | | | B | | | C | | |
|---|---|---|---|---|---|---|---|---|---|---|---|---|---|---|---|
| | | 1 | 0 | 2 | 1 | 0 | 2 | 1 | 0 | 2 | 1 | 0 | 2 | 1 | 0 |
| CTR | 03 | 0=no transf. stop char.<br>1=with transf. stop char.<br>+4=overline | Stop character 1 | | Stop char. 2 | | Index Word Address | | | Lowest position of Index in relevant word | 00-14 Highest even pos in print buffer | | Highest address in print buffer | | |

Fig. 8



confidential information

PHILIPS

**Index**

The index requires 8 consecutive positions in an arbitrary word (e.g. an unconditional branch instruction), in which the programmer must state the following data:

| | 1 | 2 | 3 | 4 | 5 | 6 | 7 | 8 |
|---|---|---|---|---|---|---|---|---|
| Index | 000–150 Number of char. to be transf. | | | 00-14 Highest even pos. in highest DA from which data is to be transferred | | Highest DA from which data is to be transferred | | |

Fig. 9

The word in which the index is stored, as well as the lowest position in that word occupied by the index, must be stated in the CTR-instruction.

**Index Register 983**

When a CTR-instruction is met in the program, and before it is really executed, the index is automatically transferred from the word in which it was stored by the programmer, to positions 6 - 13 of Hardware Register 983 (Index Register). During the execution of the CTR-instruction, the Index Register is used to effect a "count down" of the number of characters to be transferred, as well as of the positions in both source address and buffer word, where transfer is stopped because either the programmed number of characters to be transferred has been reached, or one of the programmed stop characters has been met.
After execution of the CTR-instruction, the Index Register will contain the following information:

| 15 | 14 | 13 | 12 | 11 | 10 | 9 | 8 | 7 | 6 | 5 | 4 | 3 | 2 | 1 | 0 | |
|---|---|---|---|---|---|---|---|---|---|---|---|---|---|---|---|---|
| Line counter | | Number of characters still to be transferred | | | Highest even pos. in DA from which data is to be transf. | | DA from which data is to be transferred | | | 0= End reached 1= stop by char.1 2 = stop by char. 2 | Highest even pos. in print buff.word for transfer of next char. | | Addr. of print buffer word to which next char. is to be transferred | | | Index regist. 983 |

Fig. 10



confidential information

PHILIPS

- Pos. 0 - 2 : address of print buffer word to which next character is to be transferred

- Pos. 3 - 4 : highest even position in print buffer word as stated in positions 0 - 2 to which next character is to be transferred

- Pos. 5 : 0 = transfer was stopped because max. number of characters was reached

  1 = transfer was stopped because stop character 1 was met

  2 = transfer was stopped because stop character 2 was met.

- Pos. 6 - 8 : next DA from which data is to be transferred

- Pos. 9 - 10 : highest even position in source DA as stated in positions 6 - 8 from which next data is to be transferred

- Pos. 11 - 13 : number of characters still to be transferred

- Pos. 14 - 15 : line counter, counting the number of line feeds (used to obtain automatic synchronization).

The line printer does not react to characters like IR or ETB, these characters being printed as a space. If an alphameric text in which e.g. the IR-code may occur, shall be printed as 2 or more separate lines, the procedure is as follows:

1. Load print buffer up to IR-code (to be programmed as a stop character).

2. Check whether buffer loading was effectively stopped by IR-code (can be seen from position 5 of Index Register) and if so, print buffer contents.

3. Repeat items 1 and 2 until the programmed number of characters has completely been transferred or e.g. the ETB-code is met (the latter code can also be programmed as a stop character).

Loading the buffer is automatically (re)-started at the positions and addresses of source DA and buffer word as stated in the Index Register.

If, however, the *modified* data in the Index Register after execution of the first CTR-instruction are needed as the start data for a subsequent CTR-instruction, the automatic transfer of the index, stating the original transfer data, to positions 6 - 13 of the Index Register 983 must be bypassed. This can be done as follows:

1. Before entering the print loop, transfer the index from the word in which it was originally stored to positions 6 - 13 of Index Register 983 (via partial transfer instruction).

2. Program 983 in section A, and 6 in position B2 of CTR-instruction. At the beginning of each CTR-instruction, this will cause an automatic transfer of positions 6 - 13 of Index Register 983 to exactly the same positions in the same address, in other words, it will leave the existing data unimpaired.
   At the beginning of each run through the loop, the original situation is restored by the partial transfer instruction of item 1.
   This way of programming is applied in the example at the end of chapter 4.

confidential information

PHILIPS

**X-section**

$x_1$ : 0 = the character that stops the transfer is not transferred;

1 = the character that stops the transfer is transferred too.

Adding 4 to the code in the $x_1$ column causes overlining of the transferred text, in a subsequent print instruction.

The mnemonics of the Assembler instruction have following meaning:

LSC = Load and Scan alphameric Characters without transfer of the stop character.

LSCT = Load and Scan alphameric Characters with Transfer of the stop character.

LSØ = Load and Scan alphameric characters with Øverlining and without transfer of the stop character.

LSØT = Load and Scan alphameric characters with Øverlining and Transfer of the stop character.

Note: No matter whether the stop character is transferred or not, it is counted down in the Index Register 983.

**X- and Y-section (absolute); Y- and Z-field (assembler)**

$x_0, y_2$ : code of the first character that stops the transfer of data to the print buffer. This can be any desired figure or sign, as for instance IR, ETB or ETX.
In the Assembler instruction this code is to be programmed in $y_1, y_0$.

$y_1, y_0$ : code of the second character that stops the transfer of data to the print buffer. This can be any desired figure or sign, as for instance ETB, IR or ETX.
In the Assembler instruction this code is to be programmed in $Z_2, Z_1$.

**A-section**

Address (label) of the word in which the index is stored. Any word can be used as Index word, but in some cases it is necessary to use IA 983 (see preceding description of Index Register 983).

**B-section** (B-increment field)

$B_2$ : lowest position of the index in the word in which it is located (word stated in A-section)

$B_1, B_0$ : 00 - 14 being the highest even position in the first buffer word used to store the relevant alphameric data (buffer word as stated in C-section). For the conversion from print position to buffer location, see table at the end of chapter 4.1.

**C-section**

Address (label) of highest buffer word used to store the relevant alphameric data.

confidential information

PHILIPS

**Examples**

1. The alphameric contents of DA 207 up to and including 200 have to be transferred to a print buffer from position 17 upwards. The transfer has to be stopped when an IR or ETB sign is met. The sign that actually stops the transfer has not to be transferred. The index is located in IA 023 at positions 3 - 10, print buffer: DA 640 - 655.
   Label IA 023: INDEX, label 655: PR-BUF
   *Instruction code:*

| OP. CODE (12–15) | VARIANT (16–23) | A-ADDRESS LABEL (24–29) | A-ADDRESS + OR– INC. (30–32) | B-ADDRESS LABEL (33–38) | B-ADDRESS + OR– INC. (39–41) | C-ADDRESS LABEL (42–47) | C-ADDRESS + OR– INC. (48–50) |
|---|---|---|---|---|---|---|---|
| LSC | 3N27 | INDEX | | | 314 | PR-BUF | 2 |

*Index:*

IA 023

| 15 | 14 | 13 | 12 | 11 | 10 | 9 | 8 | 7 | 6 | 5 | 4 | 3 | 2 | 1 | 0 |
|---|---|---|---|---|---|---|---|---|---|---|---|---|---|---|---|
| | | | | | 0 | 6 | 4 | 1 | 4 | 2 | 0 | 7 | | | |

2. 64 characters (from DA 600 upwards) have to be transferred to a print buffer from position 27 upwards. The transfer has to be stopped when the character . or : is met. The stop character has to be transferred and the text has to be overlined.
   The index is located in IA 154 (label: INDEX) at positions 3 - 10, the print buffer in DA 920 - 935 (label 935: PR-BUF).

   *Instruction code:*

| OP. CODE (12–15) | VARIANT (16–23) | A-ADDRESS LABEL (24–29) | A-ADDRESS + OR– INC. (30–32) | B-ADDRESS LABEL (33–38) | B-ADDRESS + OR– INC. (39–41) | C-ADDRESS LABEL (42–47) | C-ADDRESS + OR– INC. (48–50) |
|---|---|---|---|---|---|---|---|
| LSØT | 1Ø0K | INDEX | | | 310 | PR-BUF | 3 |

*Index:*

IA 154

| 15 | 14 | 13 | 12 | 11 | 10 | 9 | 8 | 7 | 6 | 5 | 4 | 3 | 2 | 1 | 0 |
|---|---|---|---|---|---|---|---|---|---|---|---|---|---|---|---|
| | | | | | 0 | 6 | 4 | 1 | 4 | 6 | 0 | 7 | | | |

confidential information

PHILIPS

### 4. 3. Instruction PRL (PRint a Line)

*Assembler instruction PLNE = Print a LiNE.*

| MNEMONIC | 13 | 12 | 11 | 10 | 9 | | | | | 8 | 7 | 6 | | 5 | 4 | 3 | | 2 | 1 | 0 |
|---|---|---|---|---|---|---|---|---|---|---|---|---|---|---|---|---|---|---|---|---|
| | $X_1$ | $X_0$ | $Y_2$ | $Y_1$ | $Y_0$ | $Z_2$ | $Z_1$ | $Z_0$ | A-LABEL | I | N | C | B-LABEL | I | N | C | C-LABEL | I | N | C |
| PLNE | Words per print head | | | Interface ch. | Seq. no. | | | | LABEL | | | | | Lines feed | | | | Synchro | Form height | |

Fig. 11

The PRL instruction is used to print a line of max. 128 characters. The line to be printed has to be available in a print butter of max. 16 words. Each of the two print heads prints the programmed number of words with a maximum of 8 words per print head. The first print head prints the first half of the print buffer starting at the highest buffer word, the second print head prints the second half of the print buffer, starting at the highest word minus the programmed number of words.
Both print heads always print the same number of words. If one print head has to print less than the other, the positions in the print buffer where no characters are wanted have to be filled with blanks.
After printing the last words, the printer returns to the home position.
The programmed line feed is given before printing of a line.
If wanted, synchronization (form transport from the actual print line to the first print line of the next form) can be programmed. The form height (expressed in sixths of an inch) has to be programmed in this instruction.

*Absolute instruction:*

| MNE-MONIC | OP. CD. | X | | Y | | | A | | | B | | | C | | |
|---|---|---|---|---|---|---|---|---|---|---|---|---|---|---|---|
| | | 1 | 0 | 2 | 1 | 0 | 2 | 1 | 0 | 2 | 1 | 0 | 2 | 1 | 0 |
| PRL | 63 | 00-08 Number of words per print head | | - | Interface channel and device number | | Highest address of print buff. | | | - | 00-99 Lines feed before printing | | 0= No synchr. 1 = synchr. | Form height | |

Fig. 12



confidential Information
PHILIPS
5122 993 01 032

**X-section**

00 - 08, being the number of words to be printed by each print head. Both print heads always print the same number of words.

**Y-section**

$y_2$ : no significance

$y_1$ : 0 or 2, stating the interface channels.
The line printer requires two interface channels, viz. one for each print head. When a 0 is programmed, channels 0 and 1 are used.
When a 2 is programmed, channels 2 and 3 are used.
However, channels 0 and 1 have been standardized.

$y_0$ : 0 or 8 being the device number. In a configuration with punched card peripherals, device number 8 has been standardized.
In a configuration with paper tape peripherals, device number 0 has been standardized.
It is possible to connect two line printers to every two interface channels. However the two line printers connected to the same channel cannot print simultaneously.

**A-section**

The highest address (label) of the print buffer.

**B-section** (B-increment field)

$B_2$ : no significance

$B_1$, $B_0$, : 00 - 99 being the number of line feeds. The programmed number of line feeds is given before printing a line.

**C-section** (C-increment field)

$C_2$ : 0 = no synchronization.
1 = synchronization.
Automatic synchronization (6 line feeds) is obtained anyway when the line counter in positions 14, 15 of the Index Register 983 comprises a value identical to that programmed in columns $C_1$, $C_0$.

$C_1$, $C_0$ : form height, expressed as the number of real lines per form. As the vertical spacing is 6 lines per inch, and at the top and the lower side of the forms 6 lines in total are not printed, the form height is (n-1) x 6 where n = form height in inches.
For instance, for a 12" form, 66 has to be stated.

**Examples**

1. A line of 128 characters has to be printed without synchronization and with one line feed, on 11" forms. Interface channels 0 and 1, device number 8. The print buffer is situated in locations 940 - 955 (label 955: PR-BUF).

   *Instruction code:*

| | VARIANT | | | A-ADDRESS | | B-ADDRESS | | C-ADDRESS | |
|---|---|---|---|---|---|---|---|---|---|
| OP. CODE | $X_1$ $X_0$ | $Y_2$ $Y_1$ $Y_0$ | $Z_2$ $Z_1$ $Z_0$ | LABEL | + OR− INC. | LABEL | + OR− INC. | LABEL | + OR− INC. |
| 12 13 14 15 | 16 17 | 18 19 20 | 21 22 23 | 24 25 26 27 28 29 | 30 31 32 | 33 34 35 36 37 38 | 39 40 41 | 42 43 44 45 46 47 | 48 49 50 |
| PLNB | 08 | 08 | | PR-BUF | | | 01 | | 060 |



confidential information

PHILIPS

2. A line of 96 characters has to be printed on a 12" form with synchronization. The printer is unit 0, connected to interface channels 0 and 1. Both parts of the line printed by the first and the second print head have to link up. Buffer locations: from DA 965 downwards (label 965: PRIBUF).

*Instruction code:*

| | VARIANT | | | | | | | | A-ADDRESS | | | B-ADDRESS | | | C-ADDRESS | | |
|---|---|---|---|---|---|---|---|---|---|---|---|---|---|---|---|---|---|
| OP. CODE | $X_1$ $X_0$ | $Y_2$ $Y_1$ $Y_0$ | $Z_2$ $Z_1$ $Z_0$ | | | | | | LABEL | + OR– INC. | | LABEL | + OR– INC. | | LABEL | + OR– INC. | |
| 12 13 14 15 | 16 17 | 18 19 20 | 21 22 23 | 24 25 26 27 28 29 | 30 31 32 | 33 34 35 36 37 38 | 39 40 41 | 42 43 44 45 46 47 | 48 49 50 | | | | | | | | |
| PLNE | 08 | | | PRIBUF | | | | | 166 | | | | | | | | |

3. A line of 96 characters has to be printed on a 12" form with synchronization. The printer is unit 0, connected to interface channels 0 and 1. Both parts of the the line do not have to link up. Buffer locations: from DA 965 downwards. Label 965: PRIBUF:
*Instruction code:*

| | VARIANT | | | | | | | | A-ADDRESS | | | B-ADDRESS | | | C-ADDRESS | | |
|---|---|---|---|---|---|---|---|---|---|---|---|---|---|---|---|---|---|
| OP. CODE | $X_1$ $X_0$ | $Y_2$ $Y_1$ $Y_0$ | $Z_2$ $Z_1$ $Z_0$ | | | | | | LABEL | + OR– INC. | | LABEL | + OR– INC. | | LABEL | + OR– INC. | |
| 12 13 14 15 | 16 17 | 18 19 20 | 21 22 23 | 24 25 26 27 28 29 | 30 31 32 | 33 34 35 36 37 38 | 39 40 41 | 42 43 44 45 46 47 | 48 49 50 | | | | | | | | |
| PLNE | 06 | | | PRIBUF | | | | | 166 | | | | | | | | |

confidential information

PHILIPS

4. 4. **Instruction BRC (BRanch Conditional)**

*Assembler instruction BPE = Branch on Peripheral Error.*

| MNEMONIC | 13 | 12 | 11 | 10 | 9 | | | | | 8 | 7 | 6 | | 5 | 4 | 3 | | 2 | 1 | 0 |
|---|---|---|---|---|---|---|---|---|---|---|---|---|---|---|---|---|---|---|---|---|
| | $X_1$ | $X_0$ | $Y_2$ | $Y_1$ | $Y_0$ | $Z_2$ | $Z_1$ | $Z_0$ | A-LABEL | I | N | C | B-LABEL | I | N | C | C-LABEL | I | N | C |
| BPE | | | | Interf. Ch. | Sequence No. | | | | | | | | LABEL | | | | LABEL | | | |

Fig. 13

The instruction BRC with modifier $x_1$ = 3 is used to check the correct functioning of the line printer. If a condition is detected which impedes correct functioning, a jump is made to an IA, programmed in the BRC instruction.
In general this IA will refer to an INN instruction where the execution of the program is stopped, so that the operator can remedy the malfunction. After elimination of the malfunction the normal program may be re-started at the abovementioned INN-instruction.

*Absolute instruction:*

| MNE-MONIC | OP. CD. | X | | Y | | | A | | | B | | | C | | |
|---|---|---|---|---|---|---|---|---|---|---|---|---|---|---|---|
| | | 1 | 0 | 2 | 1 | 0 | 2 | 1 | 0 | 2 | 1 | 0 | 2 | 1 | 0 |
| BRC | 20 | 3 | - | - | Interface channel | Unit no. | | - | | IA at mal-function indicated by yellow pilot lamp (paper end) | | | IA at mal-function indicated by red pilot lamp (transport error) | | |

Fig. 14



confidential information

PHILIPS

**X-section** (absolute instruction)

$x_1$ : 3 = check on correct operation of the line printer.

$x_0$ : not used.

**Y-section**

$y_2$ : not used.

$y_1$ : 0 = unit connected to interface channels 0 and 1.
2 = unit connected to interface channels 2 and 3.

$y_0$ : 0 or 8 being the unit number.

**A-section**

Not used.

**B-section**

IA to which the program will jump in the case of a malfunction indicated by the yellow pilot lamp, viz.:

- end of paper
- cover not closed.

**C-section**

IA to which the program will jump in the case of a malfunction indicated by the red pilot lamp, viz.:

- incorrect paper transport.

**Example**

The correct printing of a line printed by the Line Printer is to be checked.
The line printer is connected as unit 0 to interface channels 0 and 1.
At end of paper the program is to jump to PAPEND, at a transport error to &ERROR.

*Instruction code:*

| | VARIANT | | | | | | | | A-ADDRESS | | B-ADDRESS | | C-ADDRESS | |
|---|---|---|---|---|---|---|---|---|---|---|---|---|---|---|
| OP. CODE | $X_1$ $X_0$ | $Y_2$ $Y_1$ $Y_0$ | $Z_2$ $Z_1$ $Z_0$ | LABEL | + OR– INC. | LABEL | + OR– INC. | LABEL | + OR– INC. |
| 12 13 14 15 | 16 17 | 18 19 20 | 21 22 23 | 24 25 26 27 28 29 | 30 31 32 | 33 34 35 36 37 38 | 39 40 41 | 42 43 44 45 46 47 | 48 49 50 |
| B P E | | | | | | P A P E ND | | & E R R OR | |

**Remarks**

1. If both error conditions, indicated by the yellow and the red pilot lamps, occur at the same time the jump to the C-address is given priority over the jump to the address in the B-section.

2. After a malfunction has occurred, the line printer is locked and must be unlocked by depressing the push-button "Release" of the unit.

3. If a jump to the address stated in the B- or C-section occurs the "Return" address (address one higher than the IA comprising the relevant BRC-instruction) is stored automatically in positions 9 - 11 of IA 999.

confidential information

PHILIPS

169 - 160 Lees.

955 - 940 Print

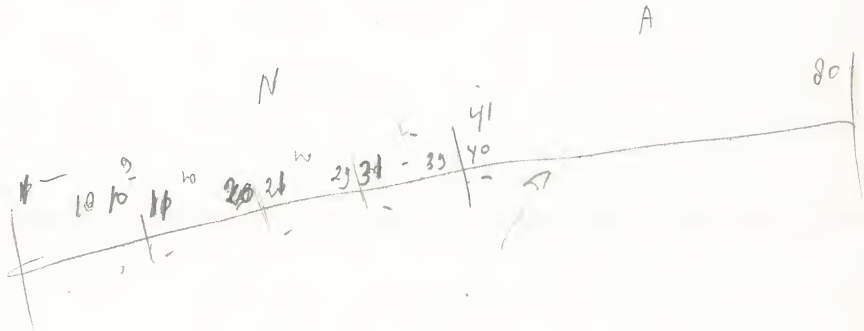


4. 5. **Programming problem**

A deck of punched cards has to be printed out via the line printer on 11" forms.
In the first 40 columns, the cards comprise 4 numerals of max. 10 figures each, algebraic sign as overpunch.
The second 40 columns comprise an alphabetic text with IR and ETB code.
The numeric data have to be printed with standard punctuation, 2 figures after decimal point, +/- as algebraic sign and spaces instead of leading zeroes.
The print out of the numerals has to include 4 spaces between the individual numerals and the complete print out has to be arranged symmetrically in the available space of 88 positions.
When the alphabetic text comprises an IR code, the remaining part of the text has to be printed on a separate line starting at the same print position as the first part of the text.
ETB code means: End of Text.
The punched card reader is connected as unit 1 to interface channel 2; the line printer as unit 8 to interface channels 0 and 1.
Read buffer for punched cards: 160 - 169
Print buffer: 940 - 955
Working locations: 170 - 173.

confidential information

PHILIPS

| PHILIPS data systems | FLOWCHART SERIES P 350 | Number of connectors | Code no. | Page no. |
|---|---|---|---|---|
| | | | C03.45.2 | |

| Customer | prepared by | date |
|---|---|---|
| | Documentation SSS | Jan. 1972 |
| Application Programming problem for Line Printer | approved by | date |

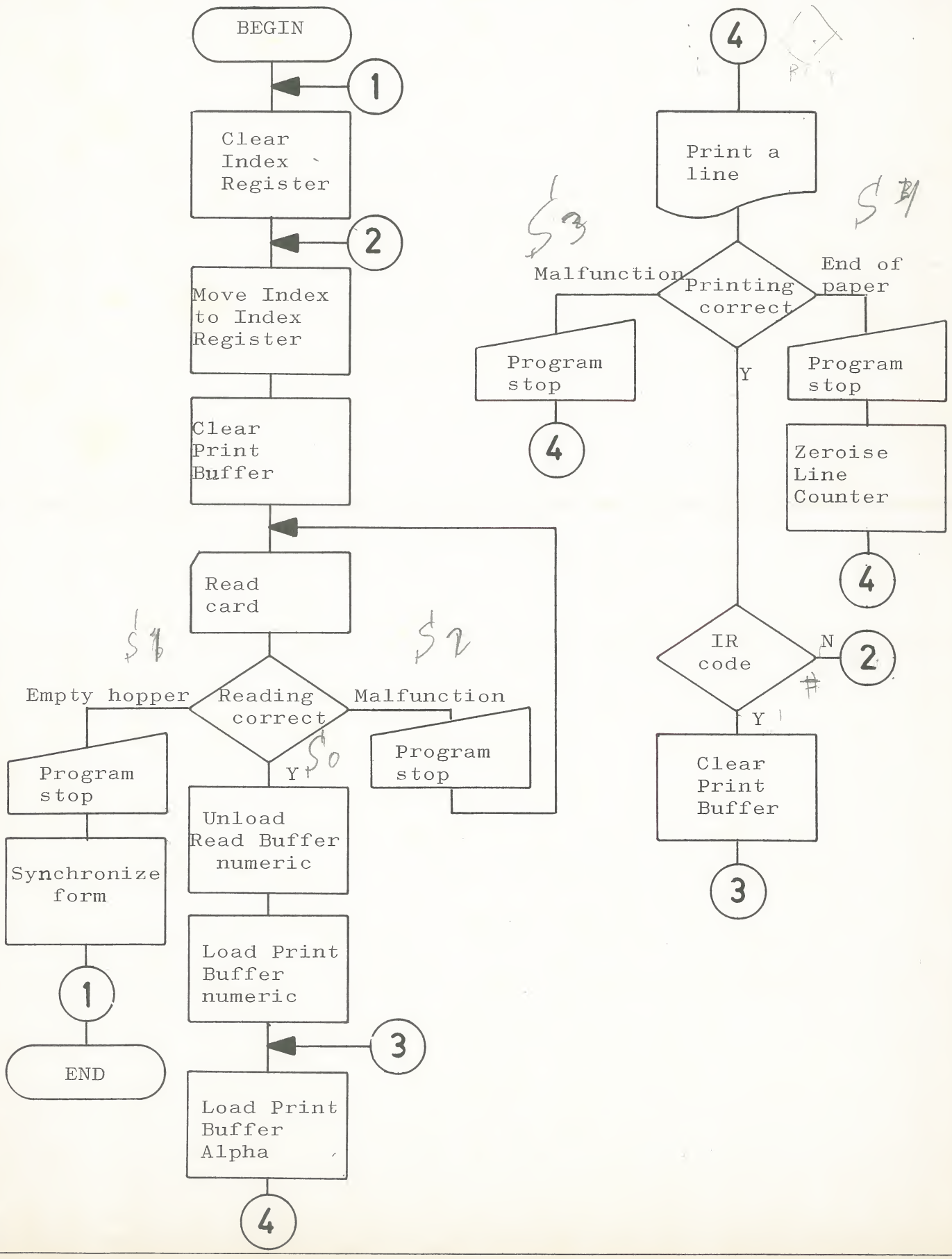

PHILIPS data systems

PROGRAMMING SHEET
SERIES P 350

| Code no. | Page no. |
|---|---|
| C03.45.3 | |

Customer

prepared by: S.S.S. Documentation date: Jan72

Application: Programming problem for line printer

approved by: date

| Card nr. | Scale | Mnemon. | Description & Symbolic notation | I.A. | instructions 15 14 op | 13 12 x | 11 10 9 y | 8 7 6 a | 5 4 3 b | 2 1 0 c |
|---|---|---|---|---|---|---|---|---|---|---|
| | | CLR | Clear Index Register | 000 | 2 3 | - | - | - | 9 8 3 | 9 8 3 |
| | | TRF | Move Index to Index Reg | 001 | 2 2 | 1 0 | 8 0 3 | 0 0 6 | 0 1 8 | 9 8 3 |
| | | CLR | Clear Print Buffer | 002 | 2 3 | 1 0 | - | - | 9 4 0 | 9 5 5 |
| | | RTC | Read Card | 003 | 4 1 | 1 0 | 0 2 1 | 1 6 9 | - | - |
| | | | | | | | | | | |
| | | BRC | Check correct reading /empty hopper | 004 | 2 0 | 3 0 | 0 2 1 | - | 0 1 9 | 0 2 2 |
| | | UDB | Unload buffer#(1st no) | 005 | 4 3 | - | 1 0 1 | 1 6 9 | 0 1 0 | 1 7 0 |
| | | UDB | Unload buffer#(2nd no) | 006 | 4 3 | - | 1 1 1 | 1 6 9 | 0 1 0 | 1 7 1 |
| | | UDB | Unload buffer#(3rd no) | 007 | 4 3 | - | 1 2 1 | 1 6 9 | 0 1 0 | 1 7 2 |
| | | | | | | | | | | |
| | | UDB | Unload buffer#(4th no) | 008 | 4 3 | - | 1 3 1 | 1 6 9 | 0 1 0 | 1 7 3 |
| | | LDN | Load print buffer # (1st number) | 009 | 6 2 | 1 1 | 0 2 2 | 1 0 0 | 1 7 0 | 9 5 3 |
| | | LDN | Load print buffer # (2nd number) | 010 | 6 2 | 1 1 | 0 2 2 | 1 0 1 | 1 7 1 | 9 5 0 |
| | | LDN | Load print buffer # (3rd number) | 011 | 6 2 | 1 1 | 0 2 2 | 1 0 8 | 1 7 2 | 9 4 8 |
| | | | | | | | | | | |
| | | LDN | Load print buffer # (4th number) | 012 | 6 2 | 1 1 | 0 2 2 | 1 0 4 | 1 7 3 | 9 4 6 |
| | | CTR | Load print buffer α | 013 | 0 3 | 0 3 | 1 3 2 7 | 9 8 3 | 6 1 4 | 9 4 4 |
| | | PRL | Print Line | 014 | 6 3 | 0 8 | 0 0 8 | 9 5 5 | 0 0 1 | 0 6 0 |
| | | BRC | Check printing | 015 | 2 0 | 3 0 | 0 0 8 | - | 0 2 4 | 0 2 7 |
| | | | | | | | | | | |
| | | CMP | Next card if # IR | 016 | 2 1 | 1 1 | 1 0 5 | 9 8 3 | 0 0 1 | 0 0 1 |
| | | CLR | Clear print buffer | 017 | 2 3 | 1 0 | - | - | 9 4 0 | 9 5 5 |
| | | BRC | Return to "Load buffer" | 018 | 2 0 | - | 0 0 4 | 0 1 4 | 1 6 4 | 0 1 3 |
| | | | | | | | | | | |

PHILIPS

PHILIPS data systems

PROGRAMMING SHEET
SERIES P 350

| Code no. | Page no. |
|---|---|
| C03.45.4 | |

Customer

prepared by: S.S.S. Documentation date: Jan72

Application: Programming problem for line printer

approved by: date:

| Card nr. | Scale | Mnemon. | Description & Symbolic notation | I.A. | instructions 15 14 op | 13 12 x | 11 10 9 y | 8 7 6 a | 5 4 3 b | 2 1 0 c |
|---|---|---|---|---|---|---|---|---|---|---|
| | | INN | Program stop | 019 | 3 0 | - | 6 00 | - | 1 00 | 1 7 0 |
| | | PRL | Synchro | 020 | 6 3 | - | - | - | - | 1 6 0 |
| | | BRC | Return to beginning | 021 | 2 0 | - | - | - | - | 0 0 0 |
| | | | | | | | | | | |
| | | INN | Program stop | 022 | 3 0 | - | 6 0 0 | - | 1 1 0 | 1 7 0 |
| | | BRC | Return to "Read card" | 023 | 2 0 | - | - | - | - | 0 0 3 |
| | | | | | | | | | | |
| | | INN | Program stop | 024 | 3 0 | - | 6 00 | - | 1 1 1 | 1 7 0 |
| | | TRF | Clear Line Counter | 025 | 2 2 | 1 1 | 2 00 | 0 1 4 | - | 9 8 3 |
| | | BRC | Return to "Print Line" | 026 | 2 0 | - | - | - | - | 0 1 4 |
| | | | | | | | | | | |
| | | INN | Program stop | 027 | 3 0 | - | 6 0 0 | - | 1 1 3 | 1 7 0 |
| | | BRC | Return to "Print Line" | 028 | 2 0 | - | - | - | - | 0 1 4 |

PHILIPS

PHILIPS data systems

# ASSEMBLER CODING FORM
## SERIES P 350

PROGRAM IDENT. (76–80)

| SEQUENCE (1–5) | LABEL (6–11) | OP. CODE (12–15) | VARIANT $X_1$ $X_0$ (16–17) | VARIANT $Y_2$ $Y_1$ $Y_0$ (18–20) | VARIANT $Z_2$ $Z_1$ $Z_0$ (21–23) | A-ADDRESS LABEL (24–29) | A-ADDRESS + OR − INC. (30–32) | B-ADDRESS LABEL (33–38) | B-ADDRESS + OR − INC. (39–41) | C-ADDRESS LABEL (42–47) | C-ADDRESS + OR − INC. (48–50) | REMARKS (51–75) |
|---|---|---|---|---|---|---|---|---|---|---|---|---|
| 0001 | | BEG | | | | START | | START | | | | |
| 2 | READBF | BUFF | 10 | | | | | | | | | RESERVE READ BUFFER |
| 3 | PRINTB | BUFF | 16 | | | | | | | | | RESERVE PRINT BUFFER |
| 4 | WORK | RSV | 4 | | | | | | | | | RESERVE WORK REGISTERS |
| 5 | START | CLR | | | | | | REM | 1 | REM | 1 | CLEAR INDEX REGISTER |
| 6 | | TFRP | | 803 | | | 006 | INDEXR | | REM | 1 | MOVE INDEX TO INDEX REG |
| 7 | | CLRS | 10 | | | | | PRINTB | 15 | PRINTB | | CLEAR PRINT BUFFER |
| 8 | | CRD | 10 | 021 | | READBF | | | | | | READ CARD |
| 9 | | BPE | | 021 | | | | ERROR1 | | ERROR2 | | CHECK CORRECT READING |
| 10 | | UBN | | 101 | | READBF | | | 010 | WORK | | UNLOAD BUFFER 1ST NO |
| 11 | | UBN | | 111 | | READBF | | | 010 | WORK | 1 | UNLOAD BUFFER 2ND NO |
| 12 | | UBN | | 121 | | READBF | | | 010 | WORK | 2 | UNLOAD BUFFER 3RD NO |
| 13 | | UBN | | 131 | | READBF | | | 010 | WORK | 3 | UNLOAD BUFFER 4TH NO |
| 14 | | LPNP | 11 | 022 | | | 100 | WORK | | PRINTB | 2 | LOAD PRINT BUFFER 1ST NO |
| 15 | | LPNP | 11 | 022 | | | 10M | WORK | 1 | PRINTB | 5 | LOAD PRINT BUFFER 2ND NO |

CONSTANT DATA (NUMERIC)

ALPHANUMERIC DATA

PROGRAMMER Documentation SSS

APPLICATION Programming problem for line printer

CUSTOMER

Page: C03.45.5

Date: Jan. 1972

OFFICE MACHINE DIVISION - EINDHOVEN

512299300931

PHILIPS data systems

# ASSEMBLER CODING FORM

## SERIES P 350

PROGRAM IDENT. 76 77 78 79 80

| SEQUENCE | LABEL | OP. CODE | VARIANT $X_1$ $X_0$ $Y_2$ $Y_1$ $Y_0$ $Z_2$ $Z_1$ $Z_0$ | A-ADDRESS LABEL | A-ADDRESS + OR– INC. | B-ADDRESS LABEL | B-ADDRESS + OR– INC. | C-ADDRESS LABEL | C-ADDRESS + OR– INC. | REMARKS |
|---|---|---|---|---|---|---|---|---|---|---|
| 16 | | LPNP | 11 022 | | 108 | WORK | 2 | PRINTB | 7 | LOAD PRINT BUFFER 3RD NO |
| 17 | | LPNP | 11 022 | | 104 | WORK | 3 | PRINTB | 9 | LOAD PRINT BUFFER 4TH NO |
| 18 | LOADAL | LSC | 3N27 | REM | 1 | | 614 | PRINTB | 11 | LOAD PRINT BUFFER ALPHA |
| 19 | | PLNE | 08 008 | PRINTB | | | 001 | | 060 | PRINT LINE |
| 20 | | BPE | 008 | | | ERROR3 | | ERROR4 | | CHECK PRINTING |
| 21 | | CMUC | 105 | REM | 1 | | 001 | START | 1 | NEXT CARD IF UNEQUAL IR |
| 22 | | CLRS | 10 | | | PRINTB | 15 | PRINTB | | CLEAR PRINT BUFFER |
| 23 | INDEXR | BRU | 004 | | 014 | | 164 | LOADAL | | RETURN TO LOAD BUFFER ALP |
| 24 | ERROR1 | ENP | 600 | | | 1000 | | WORK | | PROGRAM STOP |
| 25 | | PLNE | | | | | | | 160 | SYNCHRO |
| 26 | | BRU | | | | | | START | | RETURN TO START |
| 27 | ERROR2 | ENP | 600 | | | 1100 | | WORK | | PROGRAM STOP |
| 28 | | BRU | | | | | | START | 3 | RETURN TO READ CARD |
| 29 | ERROR3 | ENP | 600 | | | 1110 | | WORK | | PROGRAM STOP |
| 30 | | TFRC | 200 | | 014 | | | REM | 1 | CLEAR LINE COUNTER |

CONSTANT DATA (NUMERIC)

ALPHANUMERIC DATA

PROGRAMMER _____

APPLICATION _____

CUSTOMER _____

Page: C03.45.6

Date: Jan. 1972

OFFICE MACHINE DIVISION - EINDHOVEN

512299300931

PHILIPS data systems

# ASSEMBLER CODING FORM

## SERIES P 350

PROGRAM IDENT. 76 77 78 79 80

| SEQUENCE (1–5) | LABEL (6–11) | OP. CODE (12–15) | VARIANT $X_1$ $X_0$ $Y_2$ $Y_1$ $Y_0$ $Z_2$ $Z_1$ $Z_0$ (16–23) | A-ADDRESS LABEL (24–29) | A-ADDRESS + OR– INC. (30–32) | B-ADDRESS LABEL (33–38) | B-ADDRESS + OR– INC. (39–41) | C-ADDRESS LABEL (42–47) | C-ADDRESS + OR– INC. (48–50) | REMARKS (51–75) |
|---|---|---|---|---|---|---|---|---|---|---|
| 31 | | BRU | | | | | | LOADAL | 1 | RETURN TO PRINT LINE |
| 32 | ERROR4 | ENP | 600 | | | 1111 | | WORK | | PROGRAM STOP |
| 33 | | BRU | | | | | | LOADAL | 1 | RETURN TO PRINT LINE |
| 34 | | END | | | | | | | | |

CONSTANT DATA (NUMERIC)

ALPHANUMERIC DATA

PROGRAMMER _____

APPLICATION _____

CUSTOMER _____

Page: C03.45.7

Date: Jan. 1972

OFFICE MACHINE DIVISION - EINDHOVEN

512299300931

## 5. SPECIFICATIONS

### 5. 1. Character set

The character set for the line printer consists of 64 characters with following code:

| XXX ↓ | XXXX → | 0000 (0) | 0001 (1) | 0010 (2) | 0011 (3) | 0100 (4) | 0101 (5) | 0110 (6) | 0111 (7) | 1000 (8) | 1001 (9) | 1010 (10) | 1011 (11) | 1100 (12) | 1101 (13) | 1110 (14) | 1111 (15) |
|---|---|---|---|---|---|---|---|---|---|---|---|---|---|---|---|---|---|
| 000 | (0) | 0 | 1 | 2 | 3 | 4 | 5 | 6 | 7 | 8 | 9 | : | ; | CR/* | = | CR/◊ | ? |
| 001 | (1) | Space | ‰ | " | ◊ | 1) | % | & | ' | ( | ) | * | + | , | – | . | / |
| 110 | (6) | P | Q | R | S | T | U | V | W | X | Y | Z | 2) | 3) | 4) | ~ | Overl. |
| 111 | (7) | @ | A | B | C | D | E | F | G | H | I | J | K | L | M | N | O |

1) Currency symbol: $, G, £, Fr, Pts, Bs, Δρ

| Country | 2) | 3) | 4) |
|---|---|---|---|
| Argentina<br>Chile<br>Mexico<br>Spain<br>Venezuela | Ñ | | |
| Ireland<br>United Kingdom | 10 | 11 | 1/2 |
| Belgium<br>France<br>Luxemburg<br>Switzerland | Ç | | |
| Austria<br>Germany<br>Luxemburg<br>Switzerland | Ä | Ö | Ü |
| Brazil<br>Portugal | Ç | | |
| Denmark<br>Norway | Å | Æ | Ø |
| Finland<br>Sweden | Å | Ä | Ö |
| Italy | No | | |
| Greece | ψ | Λ | Ω |
| USA | # | | |

confidential information

PHILIPS

5. 2. **Fan-fold paper requirements**

Continuous stationery form sets may consist of one top copy and max. 5 flimsies. These sets have to satisfy the following requirements:

1. Only wood-free paper should be used.
2. Weight of the top copy: about 60 g/sq.m.
   Weight of the carbon paper: about 33 g/sq.m.
   Weight of the copies: about 45 g/sq.m.
3. The forms must be completely free from chad in the transport holes.
4. The Leporello perforation may be max. 2 mm.
5. Copies and carbon paper must also be provided with transport holes so that they will be guided by the pin feed.

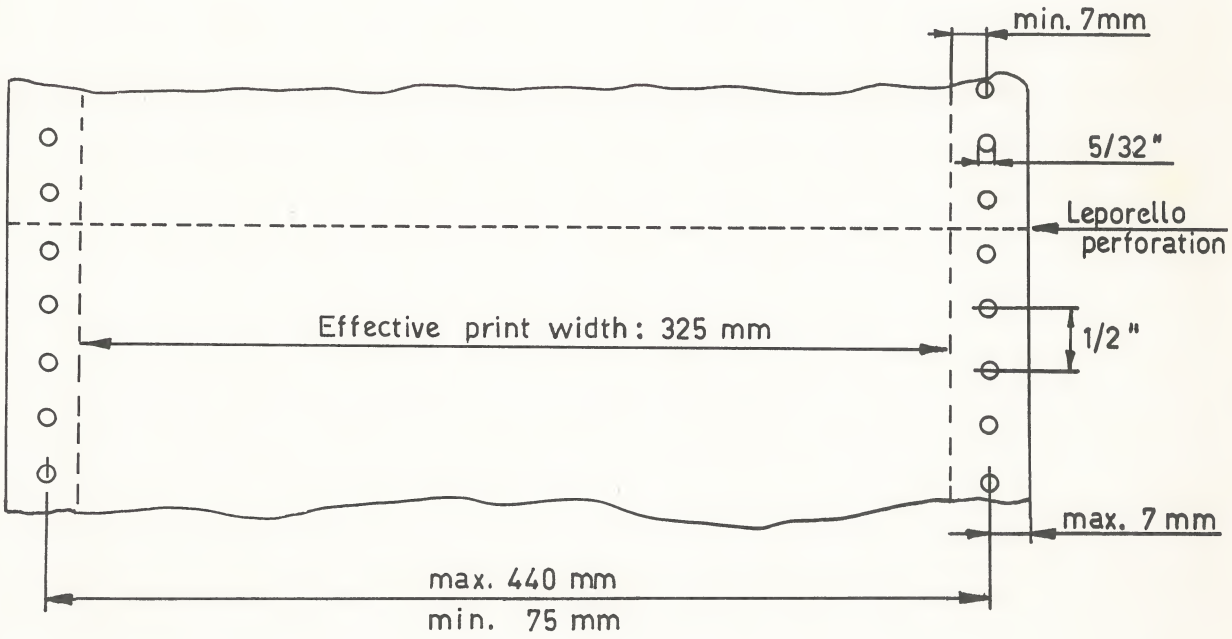


Fig. 15

confidential information

PHILIPS

5.3 *Microprograms*

For a system configuration including a line printer, the following microprograms are available

1222: 1223 STANDARD 1 L for P 352, P 356 + punched card/paper tape peripherals + line printer P 150

1250: 1251 CONDAS 1 L for P 352, P 356 + punched card/paper tape peripherals + line printer P 150 + magnetic disk *or* magnetic tape *or* data communication facility.

2222: 2223 STANDARD 2 L for P 353 + punched card/paper tape peripherals + line printer P 150

2250: 2251 CONDAS 2 L for P 353 + punched card/paper tape peripherals + line printer P 150 + magnetic disk *or* magnetic tape *or* data communication facility

4222: 4223 STANDARD 4 L for P 354, P 358 + punched card/paper tape peripherals + line printer P 150

4522: 4523 STANDARD 4 ML for P 354, P 358 + punched card/paper tape peripherals + line printer P 150 + MLC reader P 130

4250: 4251 CONDAS 4 L for P 354, P 358 + punched card/paper tape peripherals + line printer P 150 + magnetic disk *or* magnetic tape *or* data communication facility

4550: 4551 CONDAS 4 ML for P 354, P358 + punched card/paper tape peripherals + line printer P 150 + MLC reader P 130 + magnetic disk *or* magnetic tape *or* data communication facility

3222: 3223 STANDARD 3 L for P 359 + punched card/paper tape peripherals + line printer P 150

3522: 3523 STANDARD 3 ML for P 359 + punched card/paper tape peripherals + line printer P 150 + MLC reader P 130

3250: 3251 CONDAS 3 L for P 359 + punched card/paper tape peripherals + line printer P 150 + magnetic disk *or* magnetic tape *or* data communication facility

3550: 3551 CONDAS 3 ML for P 359 + punched card/paper tape peripherals + line printer P 150 + MLC reader P 130 + magnetic disk *or* magnetic tape *or* data communication facility

*Note:* The even program numbers refer to european punctuation; the odd numbers to anglo-american puntuation.

confidential information

PHILIPS

## 6. OPERATING INSTRUCTIONS

### 6. 1. Replacing the ink ribbon

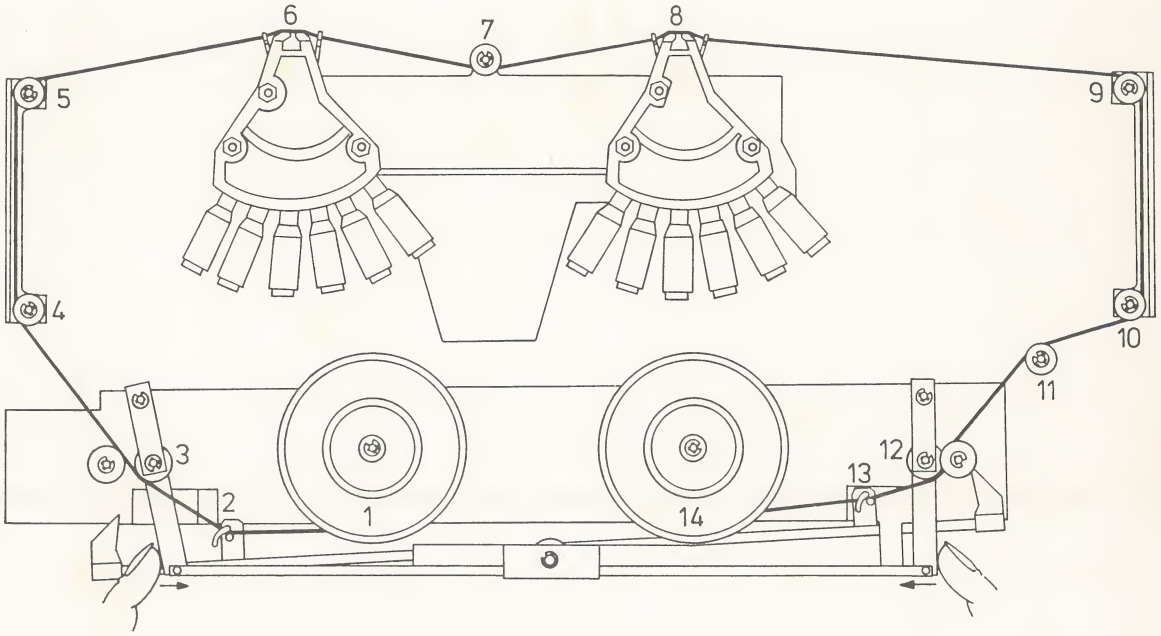


Fig. 16

It is possible to print about 30.000 lines (= 500 sheets of paper) with one ink ribbon.
In fact the printing quality is determinative for replacement of the ink ribbon.
Replacing of the ink ribbon is done in the following way:

First of all the used ribbon has to be removed:

- open the plastic cover
- remove the metal hood, by first lifting and subsequently pulling it
- release the closed transport roller either at the right or the left side
- wind the ink ribbon completely on one spool
- release ink ribbon from guiding rollers with the aid of a pair of tweezers
- take the full spool out of the machine.

confidential information

PHILIPS

To bring in a new ink ribbon:

- unwind new spool for about 1 meter
- place spool at the empty position and clamp the ink ribbon at the nearest transport roller (pos. 3 or 12)
- guide the ink ribbon with the aid of a pair of tweezers along the positions 2, 3, 4, 5, 6, 7, 8, 9, 10, 11, 12 and 13
- clamp the ink ribbon at the transport roller nearest to the empty spool by closing the pressure roller
- attach the ink ribbon to the empty spool and wind it up to the metal ring in the ribbon (about 50 cm)
- reposition the empty spool, release pressure roller 3 or 12 slightly and wind the ink ribbon a few turns by hand whilst inspecting visually the ribbon transport
- when everything is in perfect order, attach the metal hood again
- close the plastic cover.

confidential information

PHILIPS

confidential information

6. 2. **Insertion and positioning of forms**

The continuous stationery guides can be moved in horizontal direction after operation of the locking lever - horizontal position is loose, vertical position is fixed - in order to bring the guides at a correct distance from one another, according to the paper width.
The beginning of the paper has to be inserted in the lower continuous stationery guides, the plastic cover has to be opened, and the Central Processor has to be switched on.
Now the paper stretcher is inactivated automatically and by depressing the push-button ↓ the paper will be fed through.

Afterwards, the paper has to be guided through the upper continuous stationery guides and over the control wheel at the left side.

By depressing the push-button ↓ the paper can be positioned at its correct height viz: the perforation has to be about 3 lines above the print heads. This being done, the plastic cover can be closed again.
The line printer is ready for operation now. When the paper is not correctly fed over the control wheel, the printer will stop and the red pilot lamp will light up at the first printing instruction that is met in the program.
When the yellow pilot lamp - "End of paper" - lights up, the paper still in the machine can be removed by opening the cover and depressing the push-button ↓.

To achieve a correct synchronization, the line counter in positions 14, 15 of the Index Register 983 has to be zeroised after the insertion of a new form. This can be done in the error routine to which the program will jump after detection of "End of paper" in the BRC (BPE) instruction.